MICA-101

10.4" Fanless Mobile Clinical Assistant

Features

- Fanless low-power system with Intel® Atom™ processor
- Dual resistive and digitizer panels for touch operation and digital pen recognition
- Compact size, lightweight, and rugged ergonomic design
- Certified IP54 dust and water-splash proof sealed system
- Easy connectivity with Wi-Fi, Bluetooth and optional 3.5 G mobile communications
- Patient and asset identification through integrated camera and RFID reader
- Optional image based barcode scanner (no lasers), webcam and finger print reader

Specifications

Computing System	Chipset	Intel Poulbso SCH
	CPU	Intel Atom Processor Z510 (1.1 GHz) / Z530 (1.6 GHz)
	Cache and FSB	512 KB on-die L2 cache and 400 MHz / 533 MHz FSB
	Memory	DDR2 667 MHz SODIMM (2 GB)
	Operating System	Windows XP Professional or Windows XP Embedded (Windows XP Tablet PC Edition optional)
Cooling		Fanless
Graphics	Controller	Intel Graphics Media Accelerator 500
	VRAM	8 MB
Storage	PATA HDD	1 x 1.8" PATA HDD with 60 GB capacity
	SSD	Optional, either SSD or PATA HDD
Display	Touch Panel	Dual – Digitizer & Resistive
	Display Type	10.4" XGA TFT LCD (1024 x 768)
	Max. Resolution / Max.color	1024 x 768 / 256 K (RGB 6-bit color data)
	Viewing Angle	90°/50°
	Luminance	260 cd/m² (typical)
	Contrast Ratio	250 : 1 (typical)
	Backlight Lifetime	50,000 hrs
Communications	WIFI	Integrated Wireless 802.11 a/b/g/n connection
	Bluetooth	Integrated Bluetooth v2.0 + EDR
	3.5G module (Optional)	* Customer needs to pay for regional certification fee.
Audio		Internal speaker x 1, Internal mono microphone x 2
Connectivity	I/O Port Interfaces	Power-in jack x 1, Docking connector x 1, mini USB port x 1
	Embedded I/O Devices	* 2.0 Mega pixel camera with auto-focus and one LED light * 13.56 MHz RFID with ISO15693 & ISO14443A/B and active tag function * 1D/2D and UDSI Barcode scanner (optional) * VGA camera for webcam (default) or optional Integrated Fingerprint Reader
Control Buttons		* Power button * Screen lock button * Camera snapshot * Barcode button * RFID read trigger button * 3 programmable buttons: P1 default setting for entering S3 mode, P2 default setting for WIFI on/off, the centerpoint button has no default setting
System Indicators		Power x 1, WIFI x 1, RFID x 1, Bluetooth x 1
VESA Cradle Connectivity	I/O Interfaces	VGA (dual independent display support), USB and LAN ports
Power Supply	AC Adapter In / Out	100 - 240 V ~ 1.62 A 50/60 Hz / 15 V, 4.2 A Max, 63 W
	Battery Type / Capacity	Lithium-ion standard battery / 3760 mAh
	Battery Charge Time	2.5 hours
	Battery Operating Time	4 ~ 6 hours
Environment	Temperature	Operating: 0° C ~ 40° C, Storage: -20° C ~ 60° C
	Humidity	Operating: 10% ~ 90% @ 40° C non-condensing, Storage: 10% ~ 95% non-condensing
	Shock Resistance	Operating: 10 ~ 20 G, 11 ms, Non-operating: 50 G ,11 ms
	Water/Dust Resistance	IP54
	Drop Resistance	91 cm
Physical Characteristics	Dimensions (W x H x D)	258.4 x 258.3 x 42.75 mm
	Weight	1.5 kg (3.3 lbs.)
Standards	Safety	FCC Part 15 Class B, UL, CUL, CE, CB60950, CCC, R&TTE (99/5/EC)
	Medical	UL60601-1, IEC/EN60601-1, CB60601-1, TUV
	Battery pack	UL2054 and UN38.3
Warranty		Standard 2 year warranty

Dimensions

Unit: mm

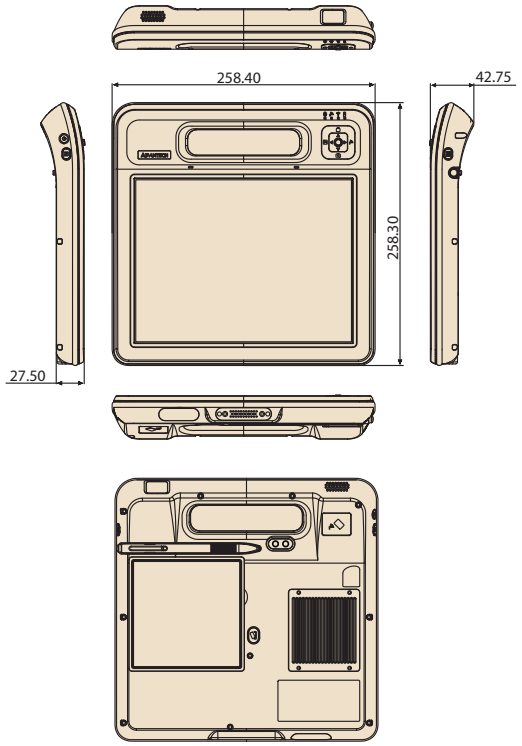

Mounting

Unit: mm

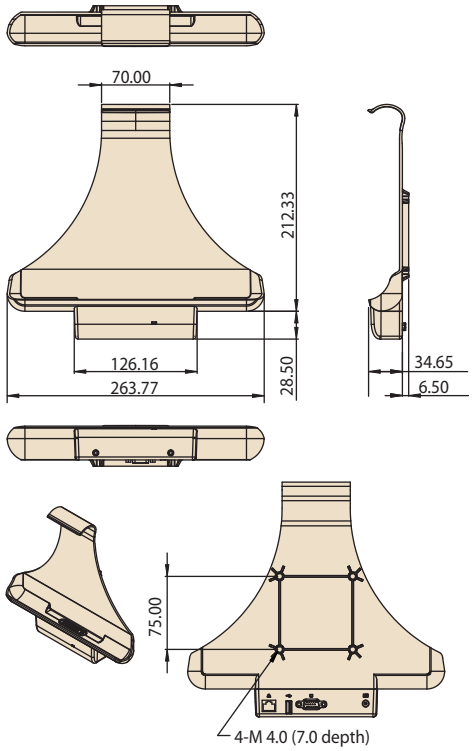

Ordering Information

Part Number	CPU	Web camera	Barcode	RFID	Camera	OS
MICA-101-F21-A2E	1.6 GHz	Yes	Yes	Yes	Yes	XP Pro
MICA-101-S11-A2E	1.1 GHz	Yes	No	Yes	Yes	XP Pro

Accessory

Part Number	Description
MICA-101-VCRE	VESA Cradle with USB/LAN/VGA for MICA-101 * Dimension (W x D x H): 264 x 42 x 241 mm
MICA-101-DCRE	Docking station with versatile I/O (Smart card reader, USB x4, VGA x1, RS232 x1, Ethernet LAN x1, Power-in jack x1) * Dimension (W x D x H): 264 x 140 x 107mm
MICA-CHARGER-A1E	MICA-101 4-in-1 battery charger * Dimension (W x D x H): 354 x 260 x 70 mm * Charging slots: 1 fast charge slot (Charge time less than 1.5 hr) 3 Standard charge slot (Charge time less than 4 hr)
MICA-101-BATT-A1E	Battery pack for MICA-101, 300g for each
MICA-STYLUS-A1E	Digitizer pen
MICA-101-STRAP-A1E	Carrying Strap for MICA-101

Packing List

Description	Quantity
Stylus pen	1
Power adapter	1
Battery	1
USB Type A to Mini B Cable	1
Warranty card	1
Software CD (Drivers and Utility, Recovery OS, Recovery Image)	3

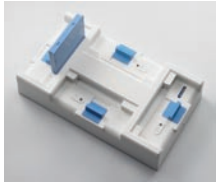

MICA-101 Charger Unit

MICA-101 Carrying Strap

MICA-101 with Cradle

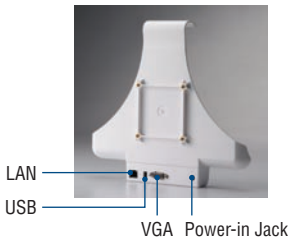

Rear Side of Cradle

MICA-101 Docking Station

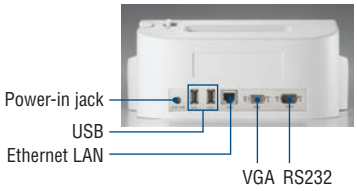

Rear Side of Docking Station